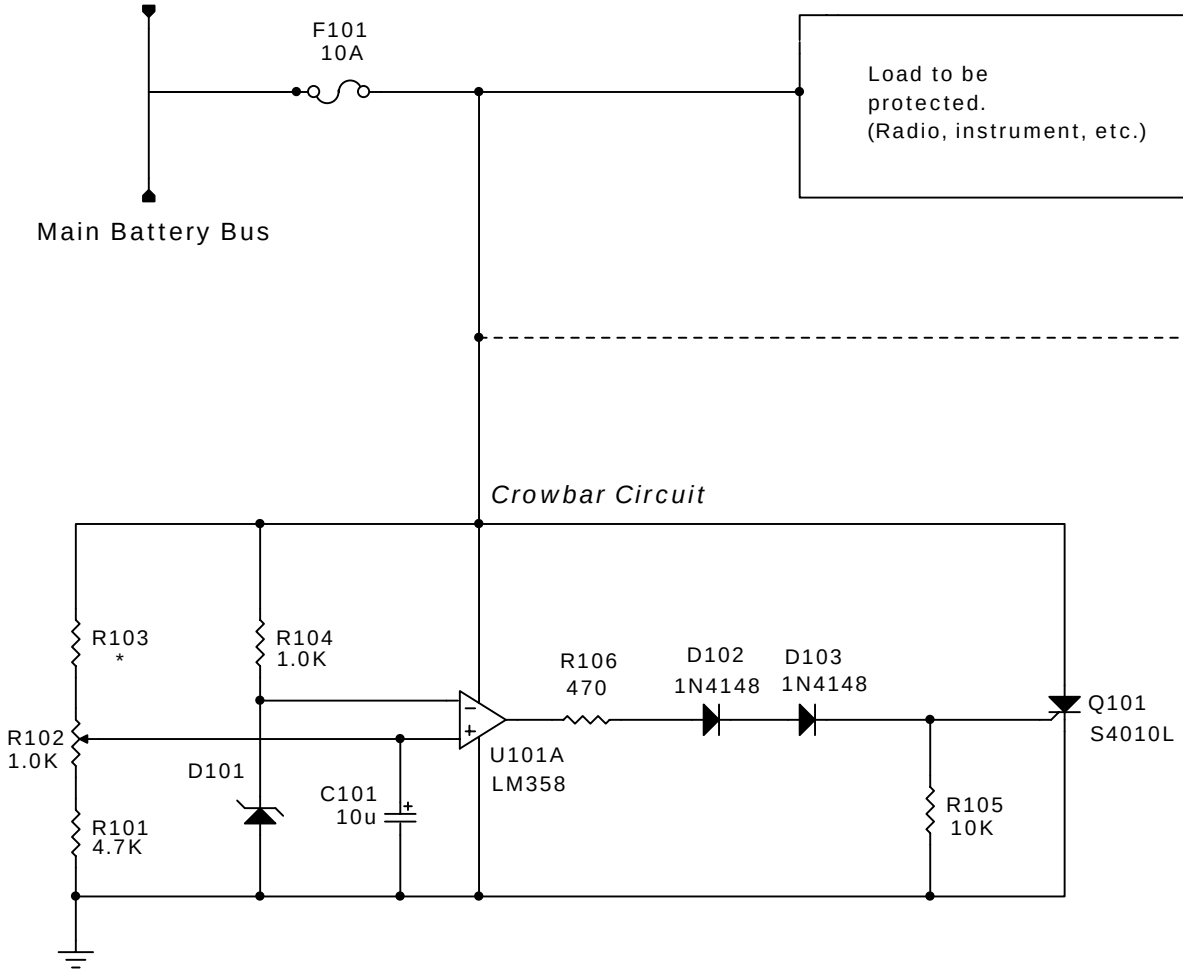

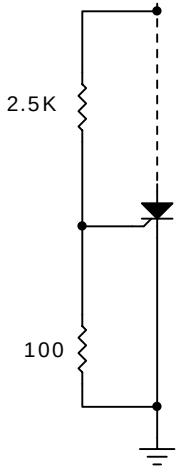

"A"

This circuit will work poorly. Don't use it.

NOTES:

For 14 volt system, R103 is 10K ohm
For 28 volt system, R103 is 27K ohm
F101 is either a fuse or a circuit breaker, 10 amp maximum

Crowbar Circuit	
Rev A	ID Kitplanes Sep '01
Date: 7 June '01	Page: 1 of 3

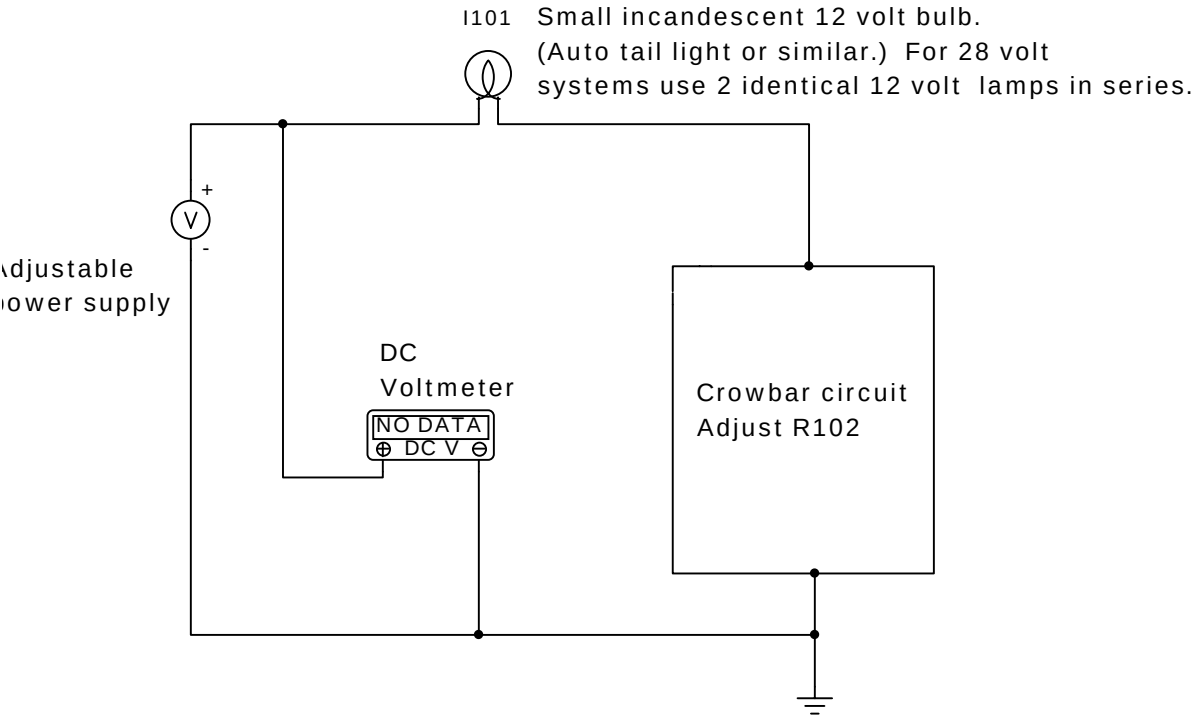

Adjustment technique:

1. Adjust the variable power supply to 12 volts.

2. Adjust R102 to one end of its range so that the voltage at the (+) terminal of the opamp U101 is as low as possible.

3. Adjust the variable power supply to 16 volts.

4. S L O W L Y adjust R102 so that the lamp just lights.

5. Check your calibration by reducing the power supply back to 12 volts, then turn the power supply off for a few seconds and then back on. Slowly bring the voltage up and the lamp should light at 16 volts (plus or minus a tenth of a volt). If it does not, repeat this procedure and be a bit slower in your R102 adjustment.

Crowbar Circuit	
Rev A	ID Kitplanes Sep '01
Date: 7 June '01	Page: 2 of 3

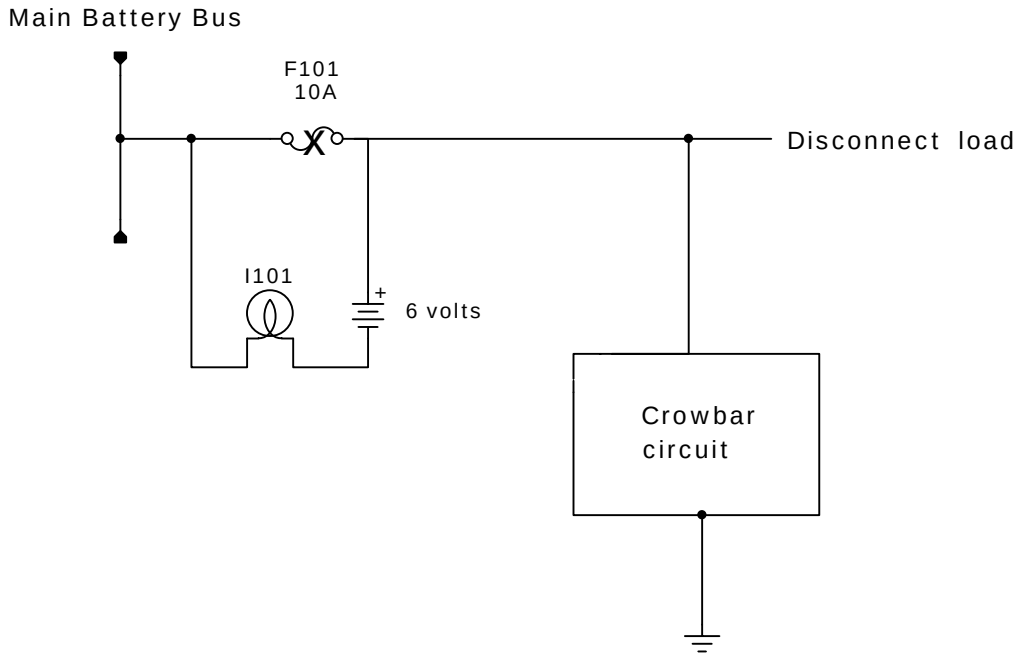

In-Aircraft Testing:

1. REMOVE THE FUSE (or open the circuit breaker).

2. Disconnect the load.

3. Connect the 6-volt battery with series lamp across the open fuse or circuit breaker. The lamp should immediately light. (For 28 volt circuits, use two lamps in series.)

(Thanks to Bob Nuckolls for the idea.)

Crowbar Circuit	
Rev A	ID Kitplanes Sep '01
Date: 7 June '01	Page: 3 of 3