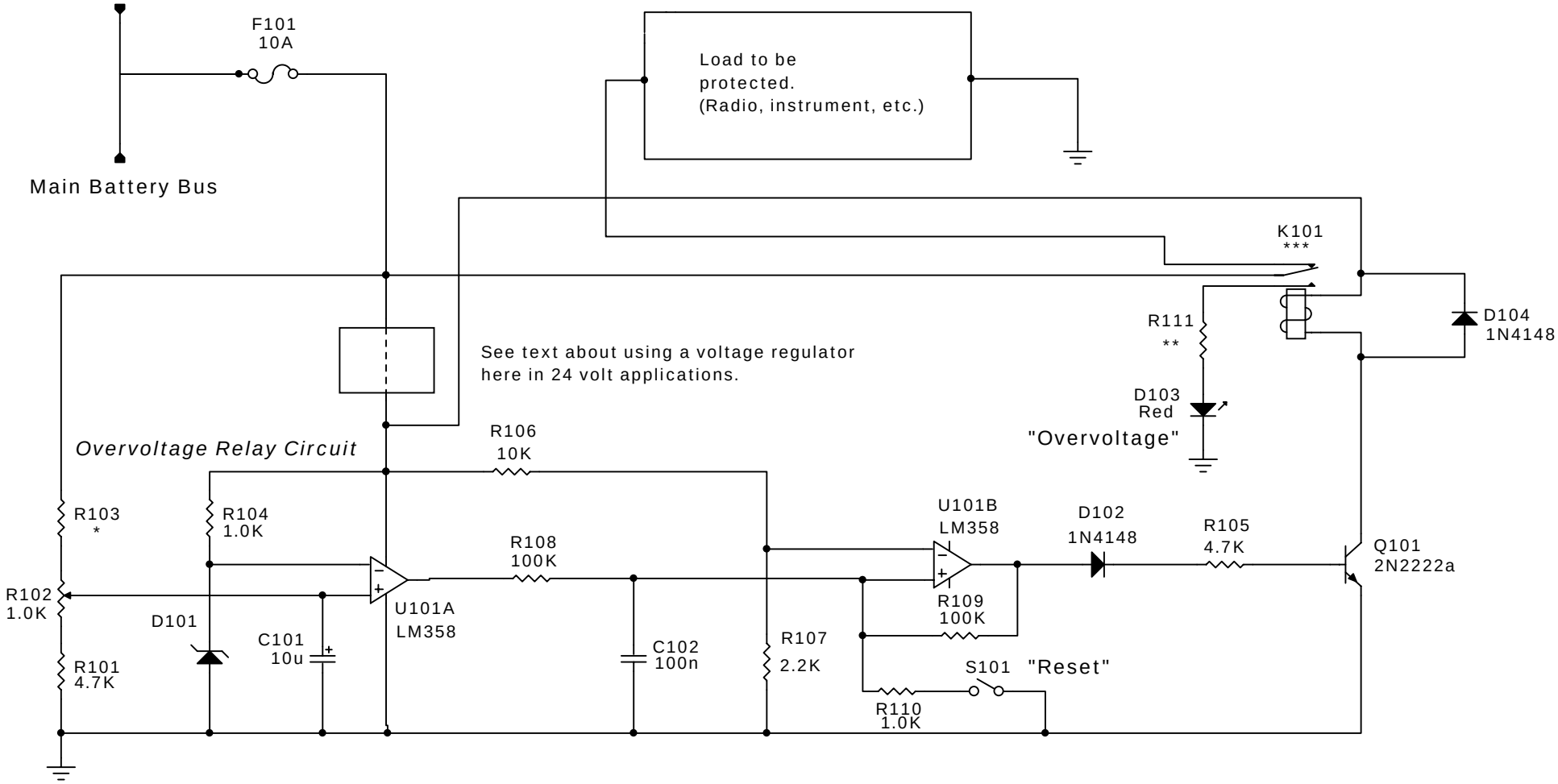

NOTES:

For 12 volt system, R103 is 10K ohm, R111 is 560 ohm, K101 is a 12 volt relay
For 28 volt system, R103 is 27K ohm, R111 is 1.2K ohm, K101 is a 24 volt relay (see text)
F101 is either a fuse or a circuit breaker, current rating to match circuit and relay contacts.

Overvoltage Relay	
Rev A	ID Kitplanes Oct '01
Date: 5 July '01	Page: 1 of 3

Connect I101 as "load to be protected"

Small incandescent 12 volt bulb.
(Auto tail light or similar.) For 24 volt systems use 2 identical 12 volt lamps in series.

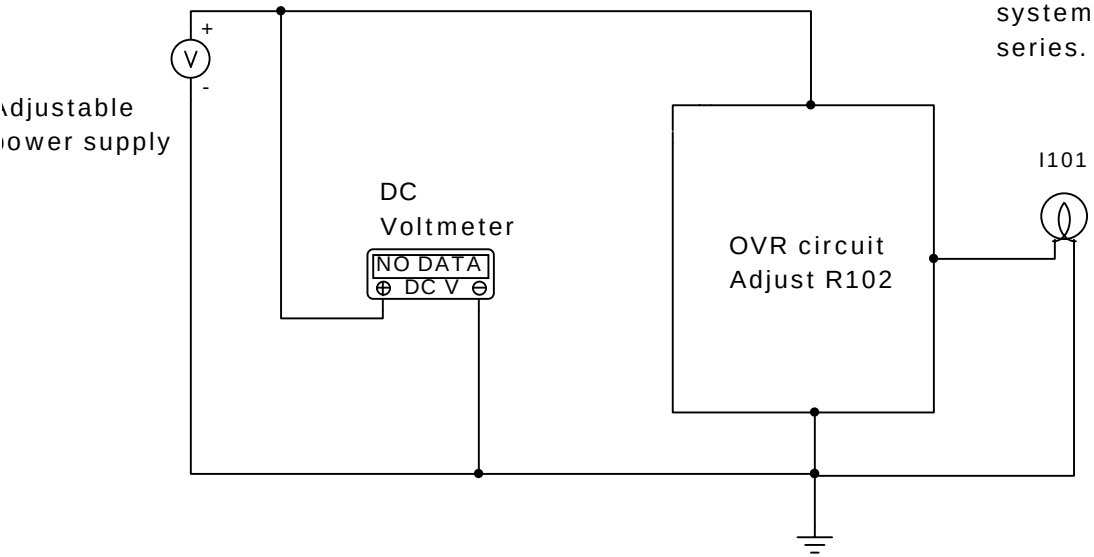

Adjustment technique:

1. Adjust the variable power supply to 12 volts.

2. Adjust R102 to one end of its range so that the voltage at the output terminal of the opamp U101A is as low as possible.

3. Adjust the variable power supply to 16 volts.

4. S L O W L Y adjust R102 so that the test lamp just extinguishes.

5. Check your calibration by reducing the power supply back to 12 volts, then turn the reset switch on for a second and then back off. Slowly bring the voltage up and the lamp should extinguish at 16 volts (plus or minus a tenth of a volt). If it does not, repeat this procedure and be a bit slower in your R102 adjustment.

Overvoltage Relay	
Rev A	ID Kitplanes Oct '01
Date: 5 July '01	Page: 2 of 3

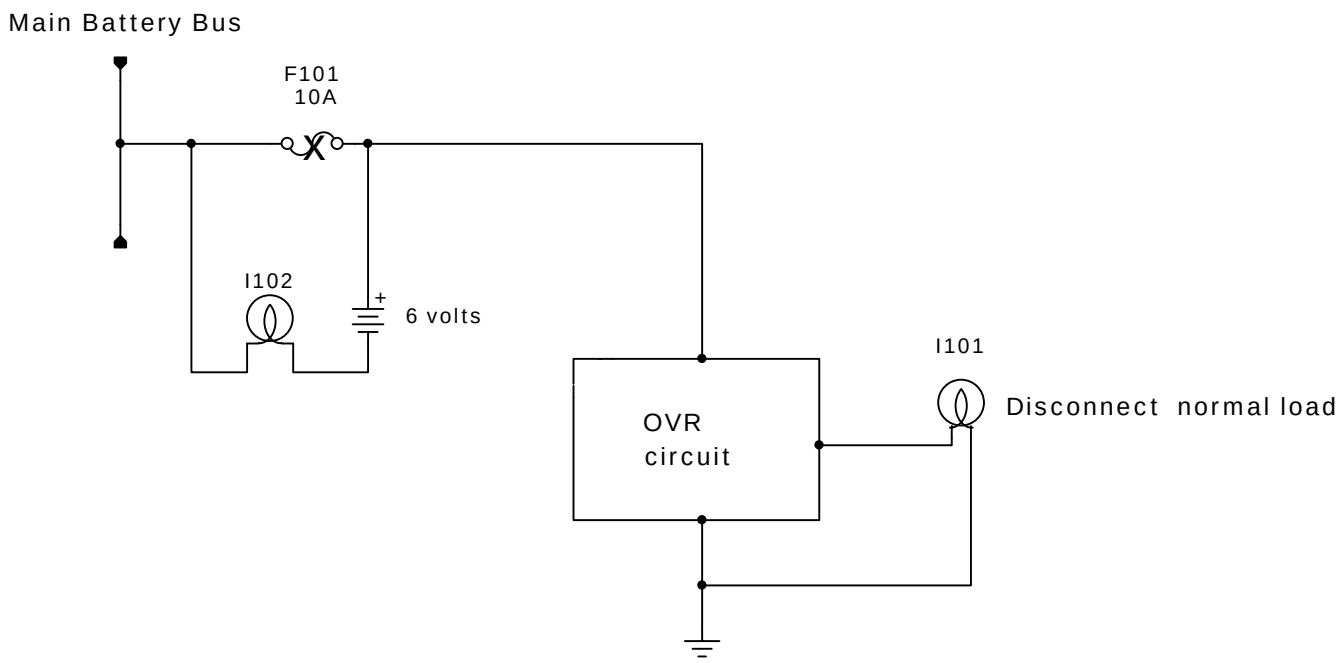

In-Aircraft Testing:

1. REMOVE THE FUSE (or open the circuit breaker).

2. Disconnect the normal load and connect bulb I101 as the load.

3. Connect the 6-volt battery with series lamp across the open fuse or circuit breaker. The lamp load should flash momentarily and then immediately extinguish. (For 24 volt circuits, use two 12 volt lamps in series.)

(Thanks to Bob Nuckolls for the idea.)

Overvoltage Relay		
Rev A	ID Kitplanes Oct '01	
Date: 5 July '01		Page: 3 of 3